INDOSAW
Committed to Excellence

Instruction Manual

HALL- EFFECT SK-006

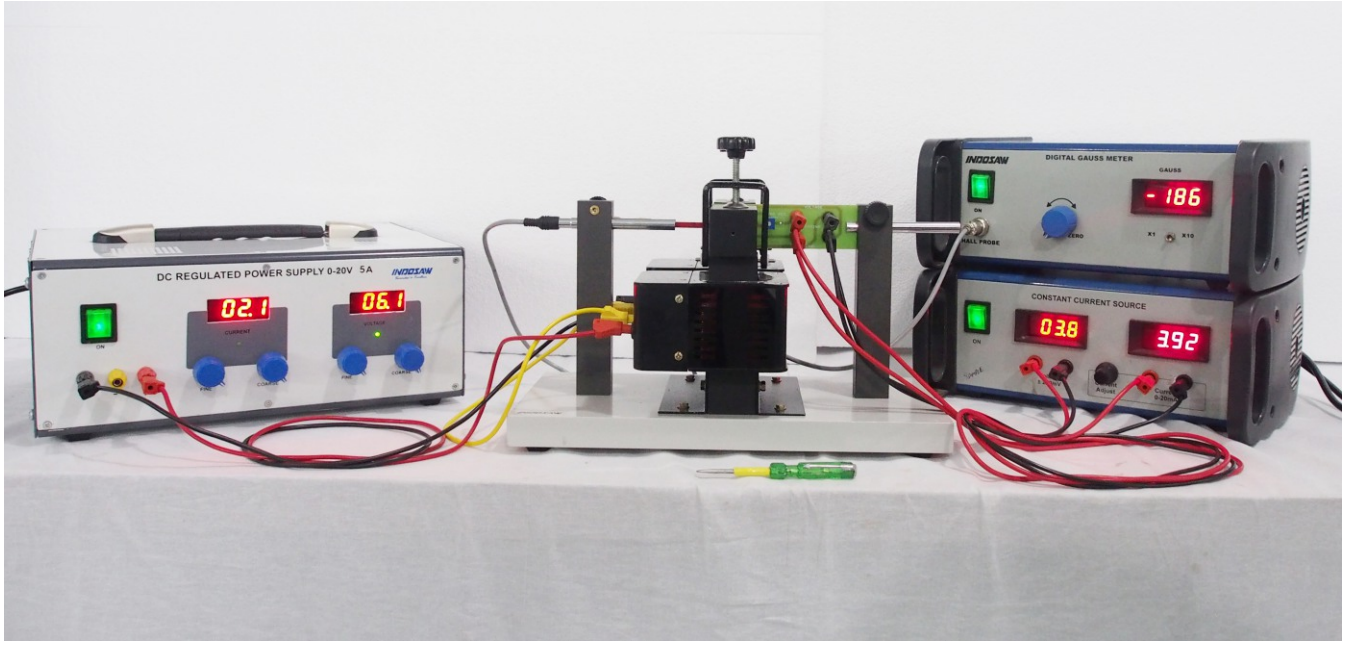

OSAW INDUSTRIAL PRODUCTS PVT. LTD.

P.O. Box No. 42, OSAW Complex, Jagadhri Road
Ambala Cantt - 133001 (Haryana) INDIA
E-mail : eenquiry@indosaw.com
E-mail : dservicing@indosaw.com

Phone : +91-171-2699347, 2699267
Fax : +91-171-2699102, 2699222
Website : www.indosaw.com
New Delhi, Phone : 011-46525029

TÜV SÜD South Asia
NABCB QMO11
An ISO 9001 :2000 Certified Company

Objectives:

1. To study Hall effect and to determine
   (i) Hall voltage V_H
   (ii) Hall coefficient R_H
2. To determine the type of majority carriers i.e. whether the semiconductor crystal is of n – type or p-type.
3. To determine the charge carrier density or carrier concentration per unit volume in the semiconductor crystal.
4. To determine the magnitude of Poynting Vector.
5. To determine the Hall angle θ_H.

Introduction:

In 1879, E.H. Hall observed that on placing a current carrying conductor perpendicular to a magnetic field, a voltage is observed perpendicular to both the magnetic field and the current. It was observed that the charge carriers, which were assumed to be electrons ,experienced a sideways force opposite to what was expected. This was later explained on the basis of band theory.

The number of conducting charges and the sign of charge carriers cannot be determined by the measurement of conductivity of a specimen. In metals/conductors ,the current carriers are only electrons whereas in semiconductors ,both electrons and holes act as current carriers .Therefore, in semiconductor, it is quite necessary to determine whether a material is of n-type or p-type .The Hall effect can be used to distinguish the two types of charge carriers and also to determine the density of charge carriers.

Theory :

When a magnetic field is applied perpendicular to a current carrying specimen(metal or semiconductor),a voltage is developed in the specimen in a direction perpendicular to both the current and the magnetic field. This phenomenon is called Hall effect. The voltage so generated is called Hall voltage.

We know that a static magnetic field has no effect on charges unless they are in motion. When the charges flow , a magnetic field directed perpendicular to the direction of flow produces a mutually perpendicular force on the charges. Consequently, electrons and holes get separated by opposite forces and produce an electric field E_H ,thereby setting up a potential difference between the ends of a specimen. This is called Hall potential V_H.

Exaplanation:

Consider a semiconductor in the form of a flat strip .Let a current I flows through the strip along X-axis . P and P′ are two points on the opposite faces of a b c d and a′ b′ c′ d′ respectively. If a millivoltmeter is connected between points P and P′ ,it does not show any reading ,indicating that there is no potential difference setup between these points. But, when a magnetic field is applied along Y-axis , i.e. perpendicular to the direction of current, a deflection is produced in the millivoltmeter indicating that a potential difference is set up between P and P ′. This potential difference is known as Hall voltage or Hall potential V_H .

As shown in fig. 1, if a current is passed along X-axis , then the electrons move along negative direction of x-axis .The force on electron due to the applied magnetic field **B** is given by,

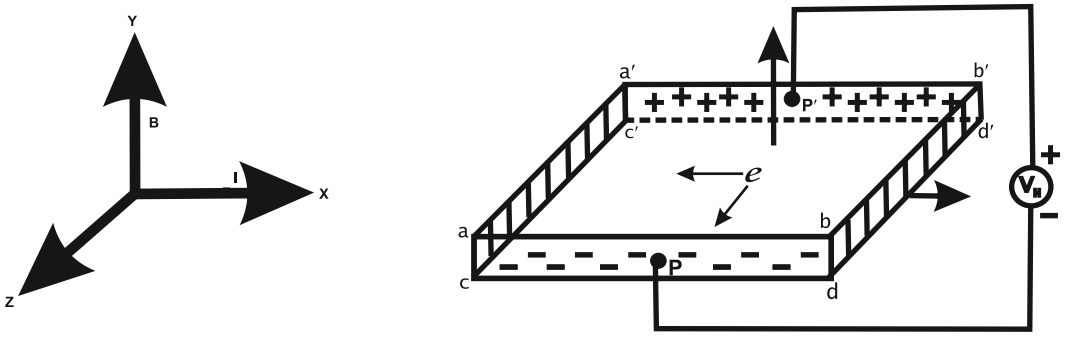

Fig. 1

F = e (**v** x **B**)

F = e v B sin 90°

Or **F** = e v B ..... (1)

where, v is the drift velocity of electron and e is the charge of electron.

Using Fleming's left hand rule it is seen that force on the electrons will be directed towards the face a b c d , i.e. along positive Z-axis ,thereby making the face a b c d negative and a′ b′ c′ d′ positive.
If the current is carried by positively charged carriers i.e. holes , the carriers move in the same direction as that of the current . The magnetic force causes the positive charge carriers to move towards the face a b c d , thereby making the face a b c d positive and a′ b′ c′ d′ negative.
Thus, by determining the polarities of the surface of the strip , we can determine the sign of the charge carriers.

At thermal equilibrium ,when the Lorentz force exactly matches the force due to the electric field E_H (the Hall voltage) we have :

$$e\,v\,B = e\,E_H = \frac{eV_H}{b} \quad \text{... .....(2)}$$

or $$v = \frac{V_H}{bB}$$

If b be the width and t is the thickness of the specimen (crystal),its cross sectional area A is given by :

$$A = b\,t \quad \text{..... (3)}$$

The current density J= I/A .....(4)

$$\text{or } I = n\,e\,v\,A \quad \text{.....(5)}$$

where, n is the number of charge carriers per unit volume .

$$\text{or } \frac{1}{ne} = \frac{vA}{I} = \frac{V_H}{bBI}A$$

$$\text{or } \frac{1}{ne} = \frac{V_H}{bBI} \times bt = \frac{V_H t}{BI} \quad \text{.....(6)}$$

The Hall coefficient is given by:

$$R_H = \frac{V_H t}{BI} = \frac{1}{ne} \quad \text{.....(7)}$$

and charge carrier density is given by:

$$n = 1/e R_H \quad \text{..... ... .(8)}$$

If the conduction is primarily due to one type of charge carriers , then conductivity is related to mobility μ_m :

$$\mu_m = \sigma R_H \quad \text{.....(9)}$$

therefore,

$$\mu_m = R_H/\rho \quad \text{..... (10)}$$

where , ρ is the resistivity.

There is another interesting quantity called the Hall angle(θ_H) defined by equation

$$\tan\theta_H = E_H/E_X \quad \text{..... ...(11)}$$

but $E_H = v_x B$ .....(12)

hence $\tan\theta_H = v_x B/E_X = \mu_m B$ .....(13)

Apparatus: INDOSAW SK006 Hall effect apparatus.

HALL EFFECT EXPERIMENT SET - UP:

It consists of :

1. Power supply for electromagnet:
   · Specifications: 0-20 V, 5 Amps.
2. Power supply (Constant current source):
   · Specifications: 0-20 mA
3. Gauss meter with Hall Probe
4. Semiconductor(Ge single crystal)mounted on a PCB
   Specifications:
   - p-type Ge crystal.
   - Thickness: 0.5 mm
   - Width : 4 mm
   - Length : 6mm
5. Multimeter for measuring Hall voltage
6. Hall Effect Apparatus consisting of two 500 turns coils.

Block Diagram of Experimental set up

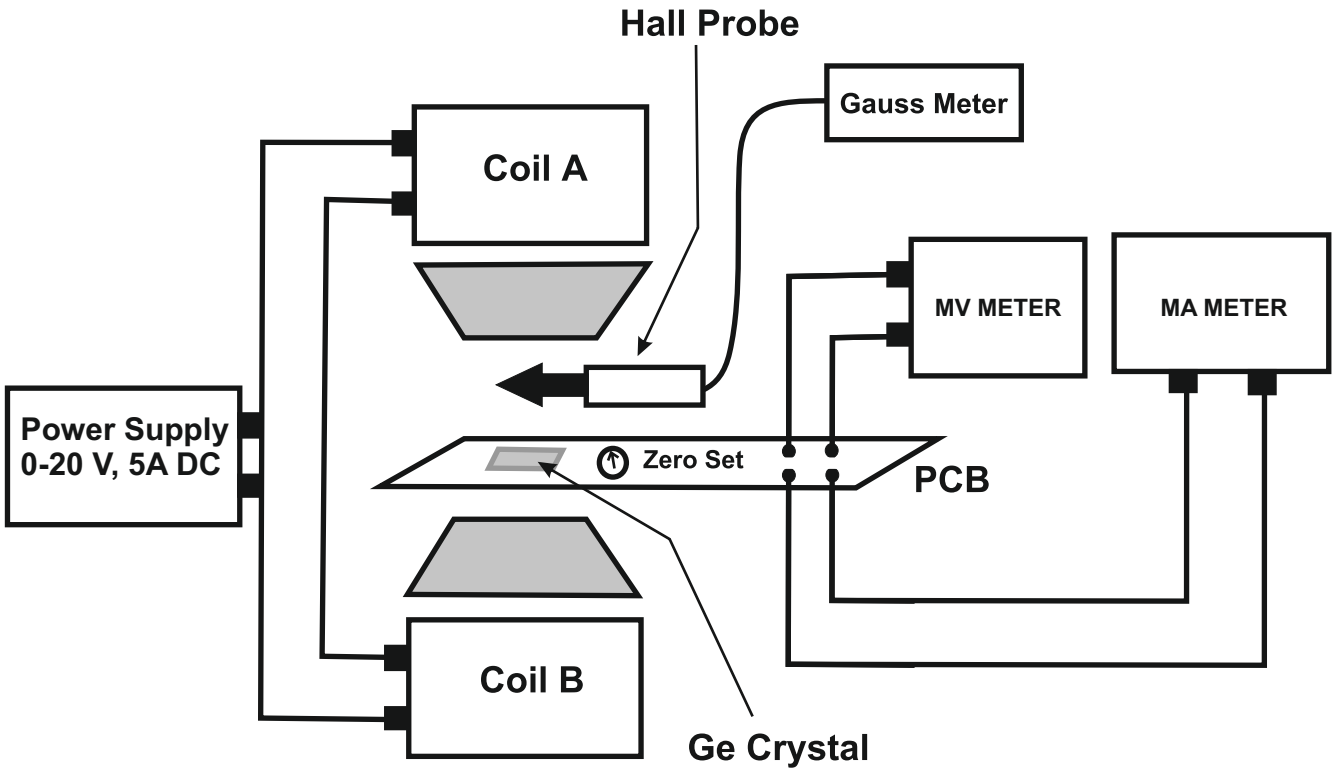

Fig. 2

Fig.2 Shows the block diagram for experimental set up with connections . A p-type Ge crystal is mounted on PCB. PCB is provided with four sockets and a pot to make the Hall voltage zero, when there is no current flowing through the crystal and also when there is no magnetic field .The upper two sockets are connected to a constant current dc source and the lower two to a multimeter/millivoltmeter.
Hall probe with Gauss meter is kept in the center between the electromagnet.

Formula used:

(1) Hall coefficient $R_H = V_H t / BI$ $m^3 C^{-1}$
where, V_H = Hall voltage in volts.
t = Thickness of the sample in m.
B = Magnetic flux density in Tesla.

(2) Concentration of charge carriers per unit volume
$n = 1/e R_H$ carriers m^{-3}
where, $e = 1.6 \times 10^{-19}$ C

(3) Resistivity of the material of the sample
$\rho = V_l b t / I L$ m
Where, V_l =voltage between two points situated l cm apart on one face of sample
b = width of the sample in m .
t = thickness of the specimen in m.

(4) Mobility $\mu_m = R_H / \rho$ $m^2 V^{-1} s^{-1}$

(5) Hall angle $\theta_H = \tan^{-1}(\mu B)$

(6) Magnitude of Poynting vector:

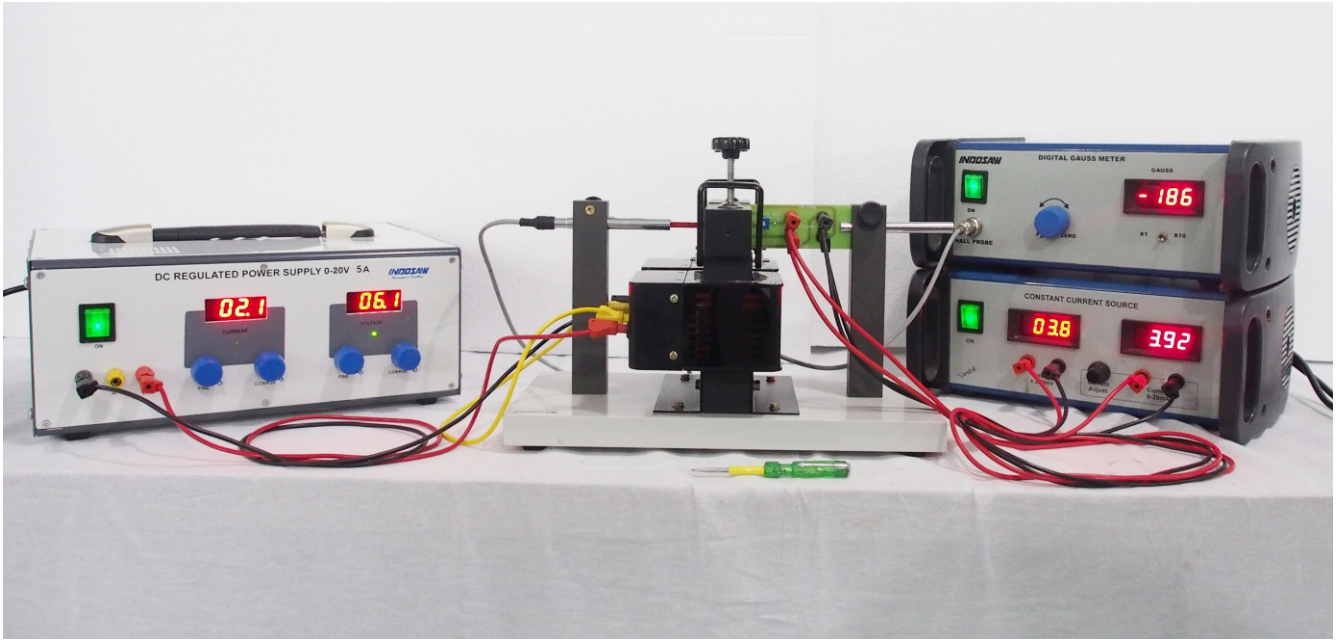

Fig. 3

EXPERIMENT SET UP PROCEDURE:

1. Mount the PCB (with mounted crystal) on one of the pillars and hall probe in another pillar.
2. Complete all the connections as shown fig.-2
3. Switch ON the Gauss Meter and place the hall probe away from the electromagnet. Select the range of the gauss meter as X1 and using the adjustment knob of the Gauss Meter, adjt the reading of the Gauss Meter as zero.

DO NOT SWITCH ON THE ELECTROMAGNET AT THIS STAGE.

4. Switch ON the constant current source and set the current, say at 5 mA in constant current source. Keep the magnetic field at zero as recorded by Gauss meter.

DO NOT SWITCH ON THE ELECTROMAGNET AT THIS STAGE.

5. Complete the circuit diagram as shown in fig.-2. When a current of 5 mA is passed through the crystal without application of magnetic field the hall voltage as recorded by the multimeter should be zero.

The zero set should be adjusted carefully and gradually.

DO NOT SWITCH ON THE ELECTROMAGNET AT THIS STAGE.

Fig. 4

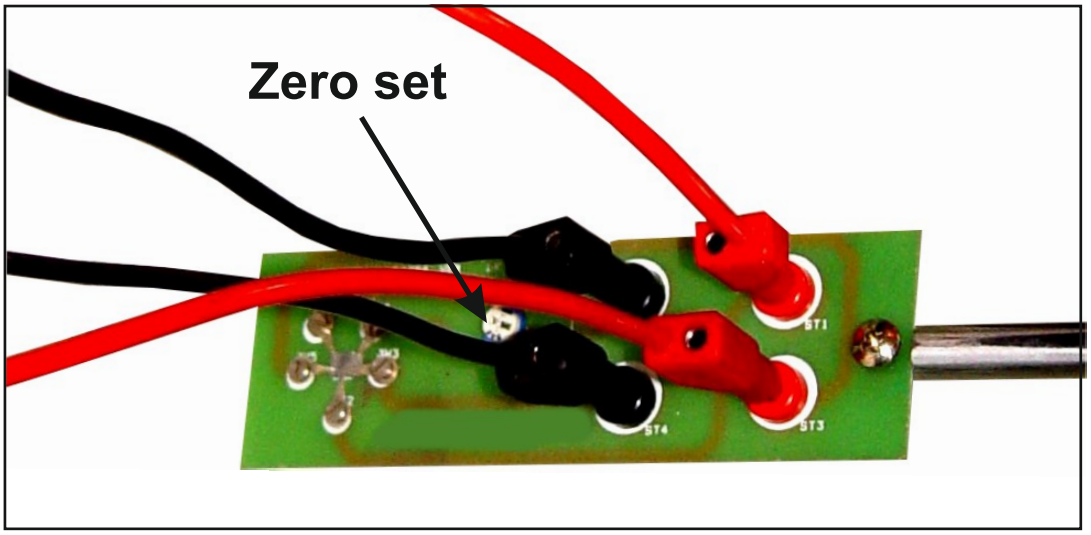

Fig.5

6. Bring the current reading of the constant current source to Zero by Adjusting the knob of the constant current source.
7. Switch ON the electromagnet (say at about 1 7V, 3.5A)
8. Select the range of the Gauss meter as x10 and measure the magnetic flux density at the center between the pole pieces. The tip of the Hall Probe and the crystal should be placed between the center of the pole pieces.
   The pole pieces should be very close to the crystal and the tip ofthe Hall Probe.
   POLE PIECES SHOULD NOT TOUCH THE CRYSTAL OR THE TIP OF THE HALL PROBE

FOR CARRYING OUT THE EXPERIMENT THE MAGNETIC FLUX DENSITY SHOULD BE MORE THAN 1500 GAUSS.

9. Do not change the current in the electromagnet i.e. keep the magnetic field constant for the whole of the experiment.
10 Vary the current through the constant current source in small increments. Note the current I (mA) from the constant current source passing through the sample and the Hall voltage (mV)as recorded by the multimeter. Record these values in the observation table.
11 . Reverse the direction the magnetic field by interchanging the ‘ +’ and ‘-’ connections of the coils (i.e by interchanging Red and Black wires to the coils of the electromagnet). Again note down the Hall Voltage for the same values of current as in step 10.
   Take the magnitude of magnetic flux density. In this particular case the hall voltage should be noted without taking care of negative sign of voltage.

Observations:

Width of the specimen, b = 4 mm
= 4×10^{-3} m

Length of the specimen, l = 6mm
= 6×10^{-3} m

Thickness of the specimen, t = 0.5 mm
= 5×10^{-4} m

Magnetic flux density, B = 3600 Gauss
= 3600×10^{-4} Tesla

Table for I and V:

Sr No	Current I(mA)	Reading of (mV) millivoltmeter (B&I in one direction)	Reading of (mV) millivoltmeter (B&I in reverse direction)	Mean value of VH mV	$\frac{V_H}{I}$ ohm
1	5	9.3	-8.2	8.75	1.75
2	5.5	10.1	-9	9.55	1.73
3	5.91	11	-9.7	10.35	1.75
4	6.49	12	-10.6	11.3	1.74
5	6.9	12.8	-11.2	12	1.73
6	7.31	13.5	-11.8	12.65	1.73
7	7.73	14.4	-12.5	13.45	1.73
8	8.03	14.9	-13	3.95	1.73
9	8.54	15.9	-13.7	14.8	1.73
10	8.91	16.5	-14.3	15.4	1.72
11	9.24	17.1	-14.8	15.95	1.72
12	9.77	18.1	-15.6	16.85	1.72
13	10.1	18.5	16.1	17.3	1.71
14	10.55	19.2	-16.8	18	1.7
15	11.05	20.9	-17.5	19.2	1.73
16	11.55	21.9	-18.2	20.05	1.73
17	12.02	22.9	-18.8	20.85	1.73
18	12.72	24.3	-19.8	22.05	1.73
19	13.05	25.8	-20.3	23.05	1.76
20	13.72	26.3	-21.4	23.85	1.73

mean $\frac{V_H}{I}$ =1.73 Ω

Table for resistivity : $l = 6 \times 10^{-3}$m

S. No.	Current I (mA)	V_ℓ (mV)	$\rho = V_\ell bt / I\ell$ (Ω m)
1.	0.35	110	.104
2.	0.58	188.2	.108
3.	1.1	360.00	.108
4.	2.2	721	.109

mean p =0.107 Ω m

Calculations :

1. Mean value of V_H/I = 1.73 ohm

2. $R_H = V_H\, t/I \times B = 2.4 \times 10^{-3}$ ohm m T^{-1}

3. Sign of Hall coefficient is positive, thus the semiconductor crystal is of p-type.(*to check ` whether a crystal is of p-type or n-type we have first used a crystal of known type)*

4. $n = 1/(1.6 \times 10^{-19} \times R_H) = \dfrac{1}{1.6 \times 10^{-19} \times 2.4 \times 10^{-3}}$

   $= 2.6 \times 10^{21}\ m^{-3}$

5. $\rho = 0.107\Omega\ m$

6. $\mu_m = R_H/\rho = ...\ m^2 V^{-1} s^{-1} = 2.2 \times 10^{-2}\ m^2 v^{-1} s^{-1}$

7. In an electromagnet wave in free space the magnetic field H and the electric field E are perpendicular to each other . A semiconductor placed parallel to E will derive a current ▯ in the semiconductor . The semiconductor is subjected simultaneously to a transverse magnetic field H producing a Hall voltage across the sample. The Hall voltage will be proportional to the product of E and H, which is the magnitude of the Poynting vector of electromagnetic wave. Therefore, Hall effect can be used to determine power flow in an electromagnetic wave and the magnitude of Poynting vector .

.8. The Hall angle $\theta_H = \tan^{-1}(\mu_m B) = 28^1$ (nearby)

Sources of error :

The experiment has the potential to have systematic errors which could skew the final calculations. This may be due to slight misalignment of the magnetic field, irregularity in the grain of germanium crystal, stray magnetic fields generated by nearby electrical equipments

Check Points :

- Before starting the experiment, check the Gauss meter is showing zero value. For this put the probe in separate place and switch on the Gauss meter, it will show zero value.
- Ensure that the specimen is located at he center between the pole pieces and exactly perpendicular to the magnetic field.
- To measure the magnetic flux the Hall probe should placed at the center between the pole pieces, parallel to semiconductor sample.
- Check th direction of electromagnet coils so that it generates the maximum magnetic field, this can be checked by placing a soft iron near the generated magnetic field. If soft iron attracts forcefully, the magnetic field is strong.

9. What is the significance of Hall effect ?
10. Name some practical applications of Hall effect ?
11. How can you find the charge carrier concentration and the mobility using Hall effect ?
12. Can you study Hall effect using Si sample instead of Ge sample ?
13. Should you prefer Ge or Si ?
14. Which has higher resistivity Ge or Si ?
15. What happens if the current is not perpendicular to the magnetic field applied ?
16. On what factors the sign of Hall potential depends?
17. Write down the dimensional formula of Hall coefficient?
18. What do you mean by charge carrier density?
19. Define mobility?
20. Write down the units of mobility and its dimensional formula?
21. Should you use ammeter or milliammeter in this experiment?

Applications of Hall effect :

1. The Hall effect can be used to determine whether the semiconductor is of n-type or p-type.
2. The Hall effect can be used to determine the carrier concentration.
3. The Hall effect can be used in magnetic flux density meter.
4. The Hall effect can be used to find the magnitude of Poynting vector.